Experimental Verification of High Frequency Power Cable Modeling and analysis for inverter motor Drive System

Dr.K.K.Saravanan[1], Dr.N.Shanmugasundaram[2]

[1]Assistant professor, Department of Electrical and Electronics Engineering, Anna University, University College of Engineering,Thirukkuvalai, Pincode- 610204,Tamilnadu, India.
E-Mail: saravanan.santi@gmail.com Mobile: +91 9789695832.

[2]Associate Professor, Department of Electrical and Electronics Engineering,Vels University,Chennai,Mail: shanmugasundaram75@gmail.com,Tamilnadu,India

ABSTRACT:

Most industrial applications have a long interconnected cable system among AFD and motor. The distributed inductance and capacitance associated with the coupling between the cable wires will generate overshoot voltages due to high rate of rise or fall in PWM output of the AFD. It may result in the damage of either motor or the AFD. In this paper, a high frequency model of the cable is developed to predict and analyze its role in the generation of voltage transients. The proposed methodology is brought out through experimental setup test bench. The cable behavior is analyzed for various parameters in frequency domain just as in time domain, for a three core cable in terms of their equivalent circuits.

KEYWORDS: Adjustable Frequency Drive (AFD), Smart power module (SPM), Digital signal controller (DSC), State Vector Module (SVM)

1. INTRODUCTION:

Many industrial process use AFD induction motors that run with long feeding cables. The drive uses PWM of induction motor that is accountable for transients reflected over voltages and high switching transient currents which disturb the common mode voltage. The transient reflected voltages shoot-up to double the time of DC link voltages. The transient overvoltage is determined by the reflection coefficient and the same is fed to the impedance mismatch between the cable and the load impedance [1-3].Whenever, the characteristic impedance of the load is more than the characteristic impedance of the cable, the voltage is reflected towards the source from the load. Then the peak voltage will be experienced at the Induction motor terminals. The reflected over-voltage has been known to cause the premature failure of the motor and cable insulation [4-9].A new generalized overvoltage suppression filter model was developed that can study the over voltage interactions between the inverter–cable–motor system. The developed model has been used to analyze the behavioral performance of commonly used RC and RLC filters. The over voltages due to the electromagnetic traveling waves which is reflected on the generator side was a function of switching pulse and traveling time. The electromagnetic traveling wave reflection that can be produced by power-electronic switching on the cable connecting the onshore converter station and the underwater generator were investigated. In the high-order LC configuration, the system gives open-loop transfer function generating high-frequency resonant peaks which makes the system unstable. The various methods of overvoltage mitigation in long cable fed PWM AC motor drive had been analyzed and the important factors pertaining to the overvoltage have been studied. The developed equivalent

circuit of long unequal length of power cable with DC-Link voltage source inverter with bouncing diagram was analyzed for the over-voltages in experimental setup. The simulation results are also presented to validate the corrections of over-voltage problems in long cable drives [15].The Cable modeling and simulation study of transient overvoltage in long cable-PWM motor drive systems represented the cable parameter variation in a wide range of frequencies from few Hz to MHz in an efficient method. Three different estimation methods for cable parameters were also developed and compared with the existing cables. The typical inverter drive with cable model as shown in Figure 1.

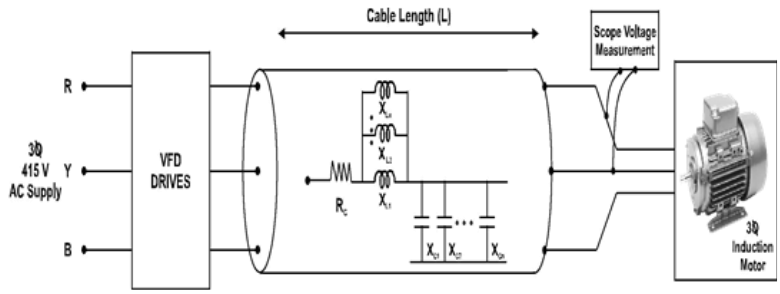

Figure 1. Block diagram of an inverter fed induction motor drive system

2. REFLECTED VOLTAGE CALCULATION: When an electrical power is transmitted through a cable, the electrical wave travels without any interference as long as there is no interruption in the cable. Any discontinuity along the cables that change the impedance within the transmission cable act as a barrier to the electrical signal that causes the interruption. Hence these barriers will cause the electrical signal to move back towards the input source with the same polarity. The presence of power cable between the AFD and Induction motor introducing a swinging frequency leads to propagation of reflected waves. The swinging frequency is excited by step voltages during switching of the inverter power devices which depends on the cable and motor parameters. The pulsation rise of the AC cable may be modelled with the help of a ramp rise time (Tr) voltage magnitude (V_m) and the step function$\delta(t)$.

$$v_{reflected}(t) = \begin{cases} V_m \frac{t}{T_t}(t) \; for \leq T_r \\ V_m \delta(t) \; for \geq T_r \end{cases} \qquad (1)$$

Where Vm is the Voltage magnitude of the dc bus. Tr is the turn on ramp rise time. The high frequency pulses can develop travelling-waves along the power cable that has been connected between AFD and motor. The traveling speed of the waves with respect to cable parameters such as inductance L_{cable} and capacitance C_{cable} and the same is represented in equation (2)

$$\omega_s = \frac{1}{\sqrt{L_m C_m}} \qquad (2)$$

The traveling time *T* that it takes for the wave front to reach the receiving end depends on the cable length (L_{cable}) and the travelling speed (ω_S)

$$T_t = \frac{l_{cable}}{\omega_S} \quad (3)$$

For the analysis of these traveling waves, the cable typical impedance Z_c is a significant quantity with losses ignored. It is obtained as

$$Z_C = \sqrt{\frac{L_{cable}}{C_{cable}}} \quad (4)$$

When the wave reaches the receiving end of the Motor, the relationship of the reflected transient voltage to the incident wave is represented by the reflection factor.

$$\Gamma_{rec} = \frac{Z_{rec} - Z_c}{Z_{rec} + Z_c} \quad (5)$$

It also depends on the surge impedance of the motor $Z_{M\text{-}Surge}$ similarly, for the sending end side the reflection factor is represented as

$$\Gamma_{send} = \frac{Z_{send} - Z_c}{Z_{send} + Z_c} \quad (6)$$

3. POWER CABLE STRUCTURE WITH TWO SEMICONDUCTOR LAYERS:

The power cable structure has core conductor with inner and outer semi conductive insulating layer. The shunt admittance and series impedance matrix are developed for a single core parallel 'N' cable model, the mutual impedance for core and screen and mutual impedance for screen and ground. Figure 2.shows a single core parallel cable with screen impedance and ground return impedance model [7-10].

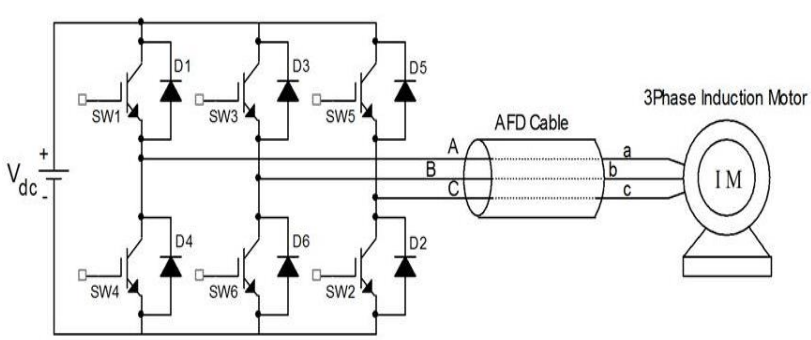

Figure 2. Physical model of a two level inverter drive

The power cable conductor is subdivided into N_{c1}, N_{c2} and N_{c3} for each single cable which combines core conductor. The insulating semiconductor layer is divided into sheath screen1 and sheath screen2 as it consists of wire and laminated configuration. For a single cable, the voltage equation is related with a drop across the lumped parameter.

$$\begin{bmatrix} V_{CONDUCTOR} \\ V_{SHEATH1} \\ V_{SHEATH2} \end{bmatrix} = [R] \begin{bmatrix} I_{CONDUCTOR} \\ I_{SHEATH1} \\ I_{SHEATH2} \end{bmatrix} + [Z] \begin{bmatrix} I_{CONDUCTOR} \\ I_{SHEATH1} \\ I_{SHEATH2} \end{bmatrix} \quad (7)$$

In the cable analysis, the core as well as sheath are again subdivided into number of coupling elements such as core inductance $Lc_1, Lc_2 \ldots Lc_N$, sheath screen inductance $L_{s11}, L_{s12}, L_{s13} \ldots L_{s1N}$ and $L_{s21}, L_{s22}, L_{s23} \ldots L_{s2N}$ and the core capacitance $C_{c1}, C_{c2}, C_{c3} \ldots C_{cN}$. Sheath screen shunt capacitance $C_{s11}, C_{s12}, C_{s13} \ldots C_{s1N}$ and $C_{s21}, C_{s22}, C_{s23} \ldots C_{s2N}$.

4. INDUCTION - MOTOR MODEL:

The mathematical representation of a three phase induction motor is expanded in stationary d-q axis reference frame whose voltage equations are as follows

$$v_{qs} = R_S i_{qs} + p\lambda_{qs} + \omega\lambda_{ds} \quad (8)$$

$$v_{ds} = R_S i_{ds} + p\lambda_{os} - \omega\lambda_{qs} \quad (9)$$

$$v_{os} = R_S i_{os} + p\lambda_{os} \quad (10)$$

$$v_{qr} = R_r i_{qr} + (\omega - \omega_R)\lambda_{dr} + p\lambda_{qr} \quad (11)$$

$$v_{dr} = R_r i_{dr} - (\omega - \omega_R)\lambda_{qr} + p\lambda_{dr} \quad (12)$$

$$v_{or} = R_r i_{or} + p\lambda_{or} \quad (13)$$

The voltage equation in the stator and rotor side is described [1-6] in equations (14) and (15).

$$V_{abc}^{stator} = r_s i_{abc}^{stator} + p\lambda_{abc}^{stator} \quad (14)$$

$$V_{abc}^{rotor} = r_R i_{abc}^{rotor} + p\lambda_{abc}^{rotor} \quad (15)$$

The stator and rotor voltage equations can be expressed in d_{qo} axis from Equations (14) and (15).

5. SIMULINK –INDUCTION MOTOR DRIVE MODEL:

The Simulink model of inverter fed induction motor drive system is shown in the Figure 3. The model consists of 585 Volts DC input source, PWM inverter, power cable and three phase induction motor. The cable performances are analyzed in both frequency domain and time domain. The sheath screen output current, sheath screen output voltage, cable output current and reflected over shoot voltage were also measured.

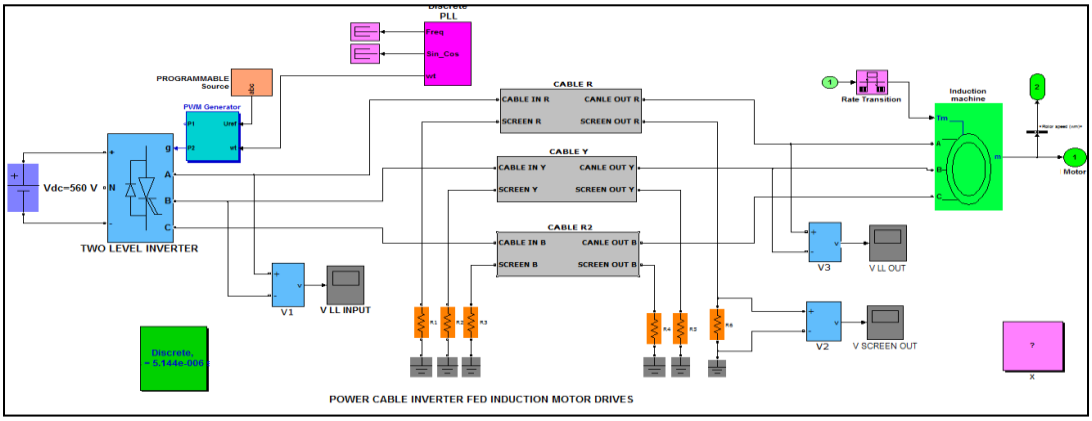

Figure 3. Matlab Simulink model - inverter fed induction motor Drive system

6 .TEST SETUP WITH 100 METER LONG CABLE-FED DRIVE SYSTEM:

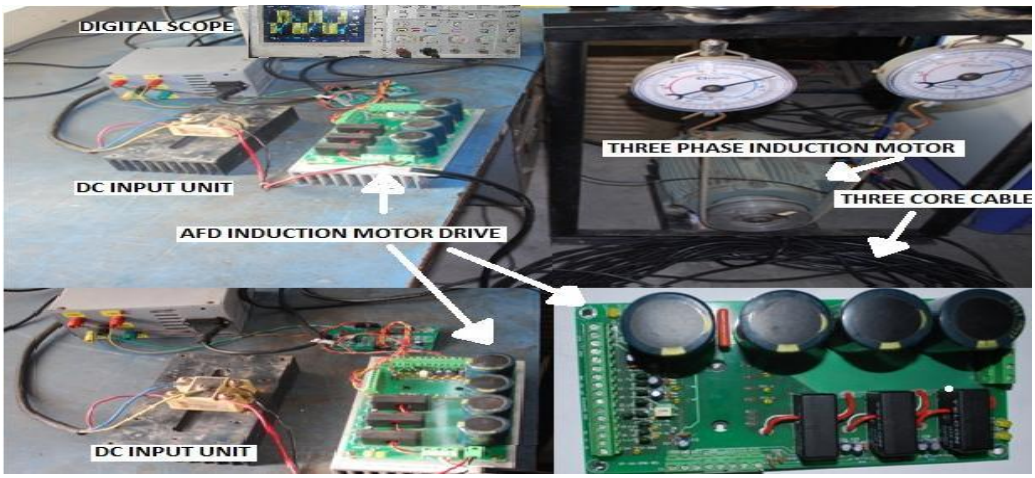

Figure 4.Experimental Test setup with 100 meter long-cable-fed drive system

A 4kW/3ϕ,two-level inverter (AFD) is fabricated using a motion control Smart power module (SPM) FSBB30CH60C of Fairchild Semiconductor. The SPM consists of three phase IGBT inverter with built-in drivers, and protection against short circuit and over temperature. The SPM is driven by a software controlled

Digital signal controller (DSC) dsPIC30F2020 that provides selectable Space Vector Modulation (SVM) or Sine Pulse Width Modulation (SPWM) based control. An experimental set-up consisting of a 4kW/3ϕAFD, 5 HP/ 3.7kW/1440 rpm induction motor coupled mechanically to a break drum loading arrangement, a three core 100 meter long power cable connected between AFD and motor and is built. Figure 4 shows an Experimental test setup. Table 1 shows the design parameter of the induction motor model.

Table 1. Induction motor parameters:

Induction motor parameters	**Rating**
No of phase(Φ) & Frequency (F)	3Φ &50Hz
Supply voltage (V_{IN}) & Rated power	415v &5Kw
Number of pair of poles (P)	2 poles
Mutual inductance(M_{MUTUAL})	0.258H
Rotor Leakage inductance ($L_{LEAKAGE\ ROTOR}$)	0.274H
Stator leakage inductance ($L_{LEAKAGE\ STAOR}$)	0.274H
Stator resistance (R_{STAROR})	485 ohm
Rotor resistance (R_{ST}	385 ohm
Coefficient of friction (KF)	0.31 Kg.m2

7. RESULTS AND DISCUSSION:

The proposed method shows (Figure 5) that the simulated inverter output voltage across R-Y phase terminal Figure 6 shows FFT Simulated current wave form motor terminal.

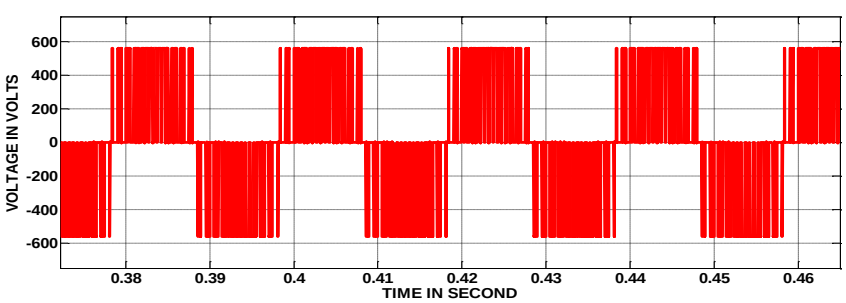

Figure 5. Simulated Inverter output Voltage

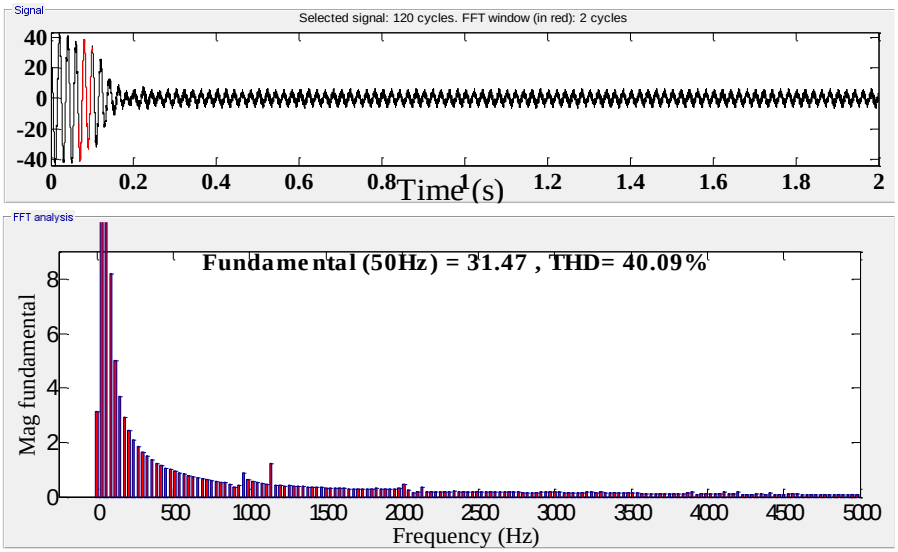

Figure 6. FFT Simulated Current waveForm motor terminal

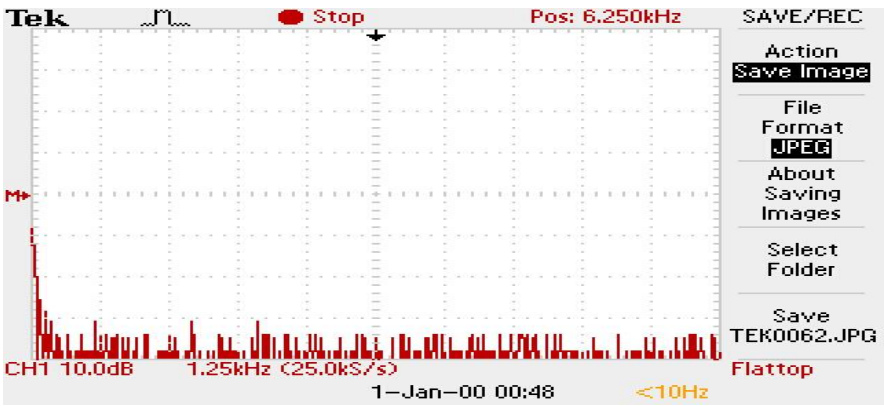

Figure 7. FFT Waveform (Experimental Measurement current waveform)

8. CONCLUSION:

This paper studies the high frequency analysis of the long power cable fed Adjustable Frequency motor Drives (AFD). In this paper, the developed model permits both the series inductance and shunt capacitance of their equivalent parameters which must be resolved at various range of frequencies. However, if the decided parameters are relatively constant, a further simplification happens and the models can be used in the time domain. The same can also be used in frequency domain to find the effect of overshoot at each harmonic of the adjustable speed drives. The proposed model is likewise used to simulate the effect of the cable connected among AFD and induction motor.Hardware results are obtained from the experimental set up for a 100 meter length three core cable which is connected between AFD and 5HP motor. The Inverter PWM output voltages, voltage FFT,

current FFT, and the motor terminal voltages are measured and compared with their simulation results. It is obviously seen that the overshoot voltages are multiplied at the motor terminas.In simulation results, cable screen voltages and currents are measured in both time and frequency domain. The outcome confirms the accuracy of the proposed technique over other high frequency cable models.

9. REFERENCES:

[1] Henglin Chen et al (2016) 'Extraction of Common-Mode Impedance of an Inverter-Fed Induction Motor', IEEE Transactions on Electromagnetic Compatibility, 58(2), 599-606.

[2] Shanmugasundaram N,Thangavel S,,Vajubunnisabegum, R(2015), 'Methodology for High Frequency Modeling of Power Cable to Estimate Reflection Phenomenon in Long fed ASD Induction Motor Drive System', International Journal of Applied Engineering Research,10(5),4414-4421.

[3] Said Amarir et al (2008),'A Modeling technique to analyze the impact of inverter supply voltage and cable length on industrial motor drives', IEEE Transaction on power electronics, 23(2), 753-762.

[4] Persson E et al (1992), 'Transient Effects in application of PWM inverter to induction motor', IEEE Transaction on industry applications, 28(5), 1095-1101.

[5] Yan Li et al (2012), 'Power Cable Joint Model: Based on Lumped Components and Cascaded Transmission Line Approach', International Journal on Electrical Engineering and Informatics, 4(4), 536-552.

[6] Ran L et al. (1998),'Conducted Electromagnetic Emission induction motor drive part I time domain analysis and identification of dominant modes', IEEE Trans. Power Electrons, 13(4), 757-767.

[7] Vonjouanne A et al. (1997),'Design considerations for an inverter output filter to mitigate the effects of long motor leads in ASD applications', IEEE Trans. Ind. Appl, 33(5), 1138–1145.

[8] Vonjouanne A, et al.(2000),'Filtering techniques to minimize the effect of long motor leads on PWM inverter fed AC motor drives', IEEE Trans. Ind. Application,32,919-926.

[9] Kerkman R, et al. (1997),'Interaction of drive modulation and cable parameters on AC motor transients, Transactions of industrial Application', 33(3), 722–731.

[10] Ramesh R et al. (2016),'Interleaved Boost Converter Fed with PV for Induction Motor Agricultural Applications', International Journal of Power Electronics and Drive

System (IJPEDS)**, 7**(3), 835-853.

[11] L.A.Saunders, et al.(1996) "Riding the reflected wave IGBT drive technology demands new motor and cable considerations," in Proc. IEEE Petroleum and Chemical Industry Conference 1996,Philadelphia, PA, 75–84.

[12] L.V.Bewley and K.Strunz (2007),'Electric Transient, in Encyclopedia of Science and Technology', 10th edition. New York: McGraw-Hil.

[13] Dr.P.S.Bimbhra, Generalized theory of Electrical machines fifth edition 24th print 2013, Khanna publishers India.

[14] Shanmugasundaram, N, Thangavel,S (2015), 'High frequency power cable modeling for screen voltage calculation of different cable length with induction motor drive system (VFD)', ARPN Journal of Engineering and Applied Sciences, 10(20), 9150-9158.

[15] Thangavel, S,Vajubunnisabegum,R(2015),'Modeling of three core power cable to estimate coupling parameters with overshoot voltage in induction motor-drives system using Matlab Simulink',International Journal of Applied Engineering Research,10(29),22647- 22651.

[16] Alessandro F. et al.(2002),"High- Frequency Cable and motor Modeling of long Cable-Fed Induction motor Drive Systems",IEEE Transactions on Industry Applications,38(5),846-852.

[17] L.Ran, et al. (1998) "conducted Electromagnetic Emission induction motor drive part I time domain analysis and identification of dominant modes", IEEE Trans. Power Electrons, 13(4), 757-767.

[18] Helder De Paula, et al. (2008) "Methodology for cable Modeling and simulation for High Frequency Phenomena studies in PWM Motor Drives", IEEE Transaction on power electronics, 23(2), 744-752.